LEON

Parts Manual

"8 Way" Pull Blade Scraper

GZ400 Model

LEON'S MFG. COMPANY INC.

P.O Box 5002 *135 York Road East* *Yorkton, Saskatchewan* *Canada* *S3N3Z4*

1-800-667-1581

Fax: 306-782-1884

Email: sales@leonsmfg.com *Website: www.leonsmfg.com*

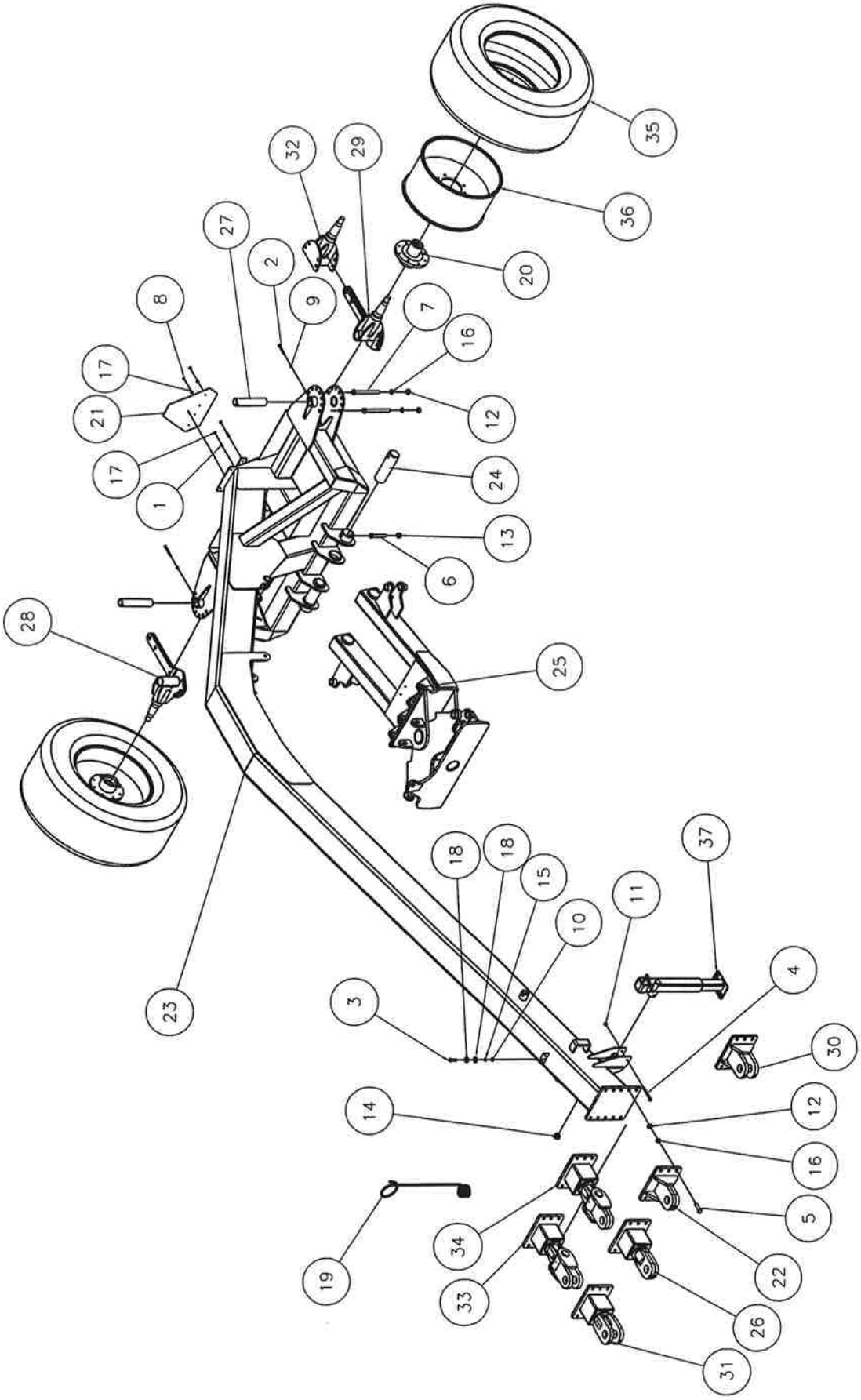

GZ SCRAPER–ISO

PRINTED IN CANADA

Parts List			
Item	Part No.	Description	Qty.
1	1101950	HEX HD BOLT-5/16UNC X 1	2
2	1102006	HEX HD BOLT-3/8UNC X 3 1/2	2
3	1102053	HEX HD BOLT-1/2UNC X 2	1
4	1102059	HEX HD BOLT-1/2UNC X 4 1/2	1
5	1102152	HEX HD BOLT-3/4UNC X 2 1/2	6
6	1102156	HEX HD BOLT-3/4UNC X 4 1/2	2
7	1102163	HEX HD BOLT-3/4UNC X 8	4
8	1102521	HEX LOCK NUT -5/16-18UNC	2
9	1102526	HEX LOCK NUT -3/8-16UNC	2
10	1102535	HEX NUT -1/2-13UNC	1
11	1102537	HEX LOCK NUT -1/2-13UNC	1
12	1102545	HEX NUT -3/4-10UNC	10
13	1102551	HEX LOCK NUT -3/4-10UNC	2
14	1102556	HEX NUT -1-8UNC-LOCKNUT	1
15	1102592	LOCKWASHER - 1/2	1
16	1102596	LOCKWASHER - 3/4	10
17	1102608	FLATWASHER - 5/16	4
18	1102611	FLATWASHER - 1/2	2
19	1105556	HOLDER - HOSE	1
20	1135513	HUB - 8-BOLT - H817	2
21	1178885	SMV EMBLEM	1
22	1381001	HITCH - TONQUE	1
23	1381010	HITCH - MAIN FRAME - SCRAPER	1
24	1381012	SHAFT - PIVOT - 3 DIA	2
25	1381020	SUBFRAME - BLADE SCRAPER	1
26	1381030	HITCH - SWIVEL TONQUE	1
27	1381079	PIN - AXLE PIVOT - 2 DIA X 10 1/2	2
28	1381080	AXLE - RIGHT	1
29	1381085	AXLE - LEFT	1
30	1381110	CLEVIS - HITCH	1
31	1381120	HITCH - SWIVEL CLEVIS	1
32	1381125	AXLE - STATIONARY	1
33	1381185	HITCH - SWIVEL CLEVIS - PIVOT	1
34	1381190	HITCH - SWIVEL TONQUE - PIVOT	1
35	1760495	TIRE - 16.5 X 22.5 (425/65R X 22.5)	2
36	1760509	RIM - 11.75 X 22.5	2
37	1784309	HITCH JACK - 7000 LB.	1

PRINTED IN CANADA

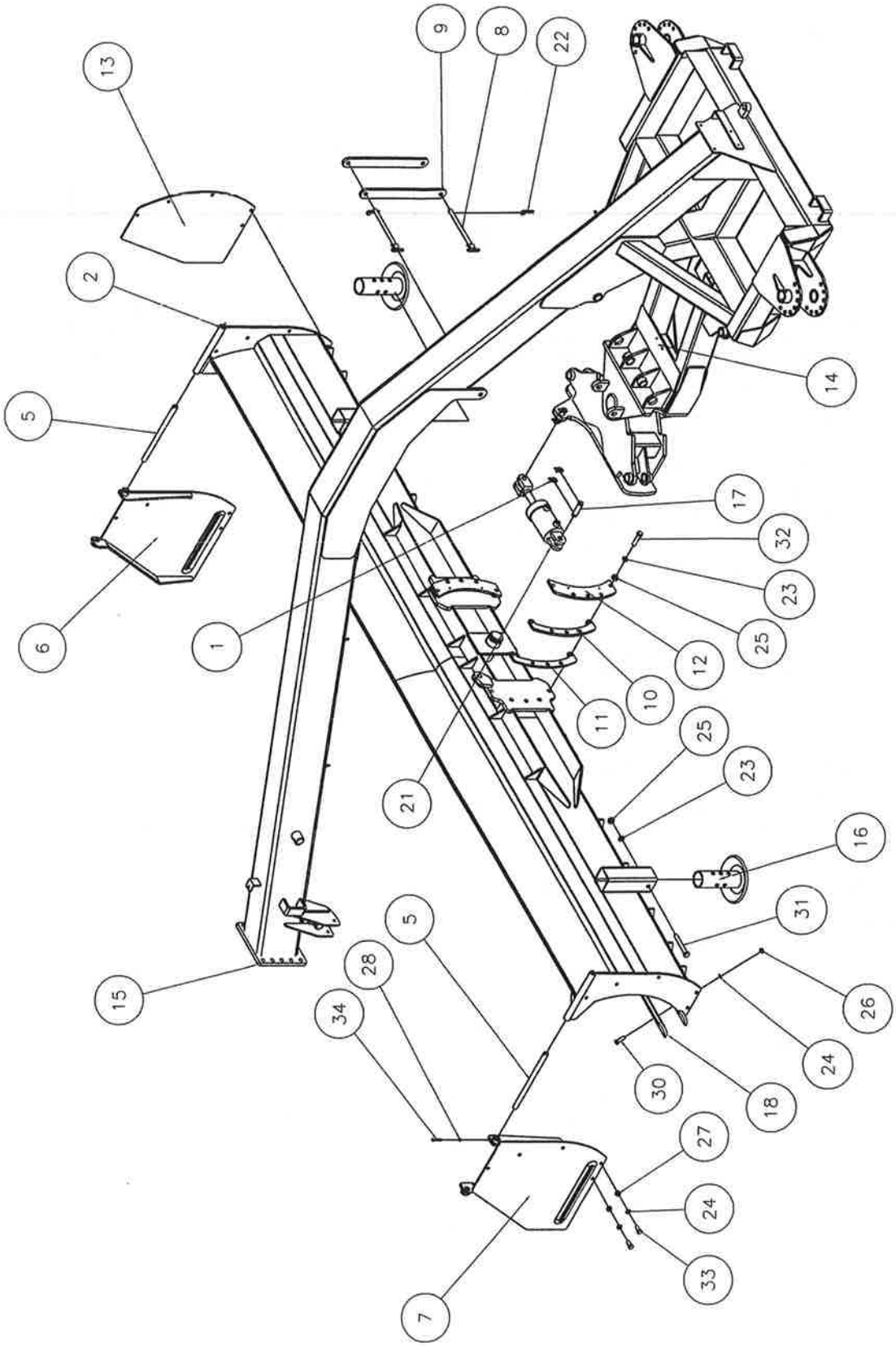

GZ SCRAPER-BLADE

Parts List			
Item	Part No.	Description	Qty.
1	1500115	RETAINER – GROOVE PIN	4
2	1381205	BLADE – 32" X 16 FT	1
2	1381204	BLADE – 32" X 14 FT	1
2	1381203	BLADE – 32" X 12 FT	1
5	1381195	PIN – BOX END PIVOT – 1 DIA	2
6	1381194	BOX END – 32" BLADE – RIGHT	1
7	1381193	BOX END – 32" BLADE – LEFT	1
8	1381181	PIN – RETAINER – SAFETY LATCH	2
9	1381180	LINK – SAFETY LATCH	2
10	1381179	SHIM PLATE – TILT–1/2	2
11	1381178	SHIM PLATE – TILT–3/8	2
12	1381175	RETAINER PLATE – TILT	2
13	1381128	SIDE PLATE–32 BLADE	1
14	1381020	SUBFRAME – BLADE SCRAPER	1
15	1381010	HITCH – MAIN FRAME – SCRAPER	1
16	1317020	SKID SHOE – BLADE	2
17	1225654	PIN – GROOVE – 1 X 2 7/8 UL	2
18	1162832	CUTTING EDGE – 8FT	2
18	1162831	CUTTING EDGE – 7FT	2
18	1162830	CUTTING EDGE – 6FT	2
21	1127084B	CYLINDER – 4 X 3 1/4	1
22	1102774	HITCHPIN – .188 X 2 – #8	2
23	1102596	LOCKWASHER – 3/4	12
24	1102594	LOCKWASHER – 5/8	26
25	1102545	HEX NUT –3/4–10UNC	12
26	1102541	HEX NUT –5/8–11UNC–GR.8	16
27	1102540	HEX NUT –5/8–11UNC	10
28	1102521	HEX LOCK NUT –5/16–18UNC	2
30	1102327	SCRAPER BOLT–5/8UNC X 2 1/4	16
31	1102158	HEX HD BOLT–3/4 UNC X 5 1/2	2
32	1102153	HEX HD BOLT–3/4 UNC X 3	10
33	1102100	HEX HD BOLT–5/8 UNC X 1 1/2	10
34	1101963	HEX HD BOLT–5/16UNC X 2 1/4	2
35	1102371	SCRAPER BOLT–NUT–LOCKWASHER–(SET)	0

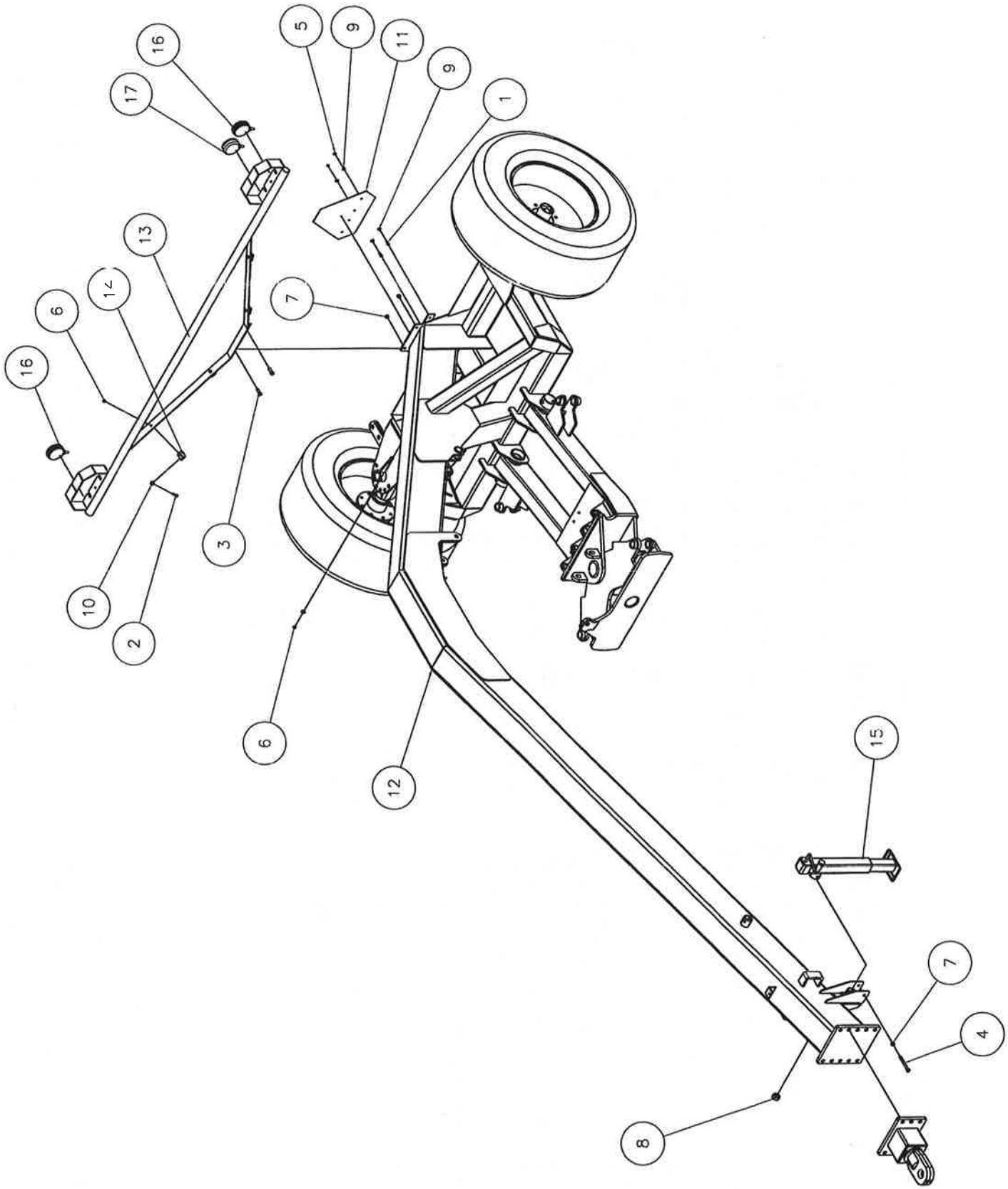

GZ SCRAPER–SAFETY

PRINTED IN CANADA

Parts List			
Item	Part No.	Description	Qty.
1	1101950	HEX HD BOLT-5/16UNC X 1	2
2	1102002	HEX HD BOLT-3/8UNC X 1 1/2	4
3	1102051	HEX HD BOLT-1/2UNC X 1 1/2	2
4	1102059	HEX HD BOLT-1/2UNC X 4 1/2	1
5	1102521	HEX LOCK NUT -5/16-18UNC	2
6	1102536	HEX LOCK NUT -3/8-16UNC	5
7	1102537	HEX LOCK NUT -1/2-13UNC	3
8	1102556	HEX NUT -1-8UNC-LOCKNUT	1
9	1102608	FLATWASHER - 5/16	4
10	1102609	FLATWASHER - 3/8	5
11	1178885	SMV EMBLEM	1
12	1381010	HITCH - MAIN FRAME - SCRAPER	1
13	1381140	BRACKET - SAFETY LIGHTS	1
14	1707130	CLAMP - OIL LINE - 2 LINE	5
15	1784309	HITCH JACK - 7000 LB.	1
16	1784410	LIGHT - SAFETY -AMBER/AMBER	2
17	1784411	LIGHT - SAFETY -RED	1
18	1381136	WIRING HARNESS - SAFETY LIGHTS	1
19	1381135	KIT - SAFETY LIGHTS	1

PRINTED IN CANADA

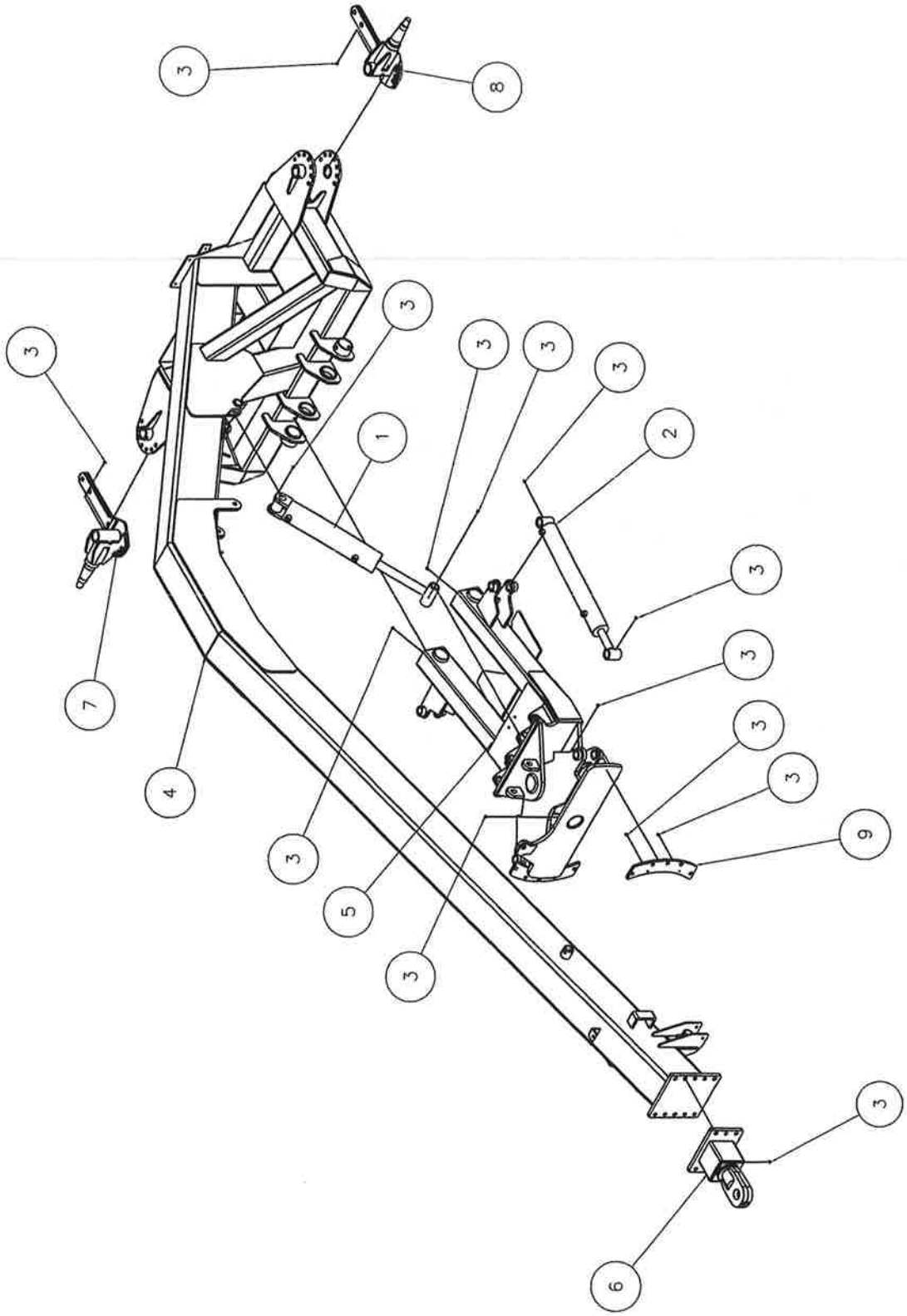

GZ SCRAPER–GREASE

PRINTED IN CANADA

Parts List			
Item	Part No.	Description	Qty.
1	1122540B	CYLINDER – 4 X 16	1
2	1122588B	CYLINDER – 3 X 23	1
3	1122797	GREASE NIPPLE–1/8–27NPT	15
4	1381010	HITCH – MAIN FRAME – SCRAPER	1
5	1381020	SUBFRAME – BLADE SCRAPER	1
6	1381030	HITCH – SWIVEL TONQUE	1
7	1381080	AXLE – RIGHT	1
8	1381085	AXLE – LEFT	1
9	1381175	RETAINER PLATE – TILT	2

PRINTED IN CANADA

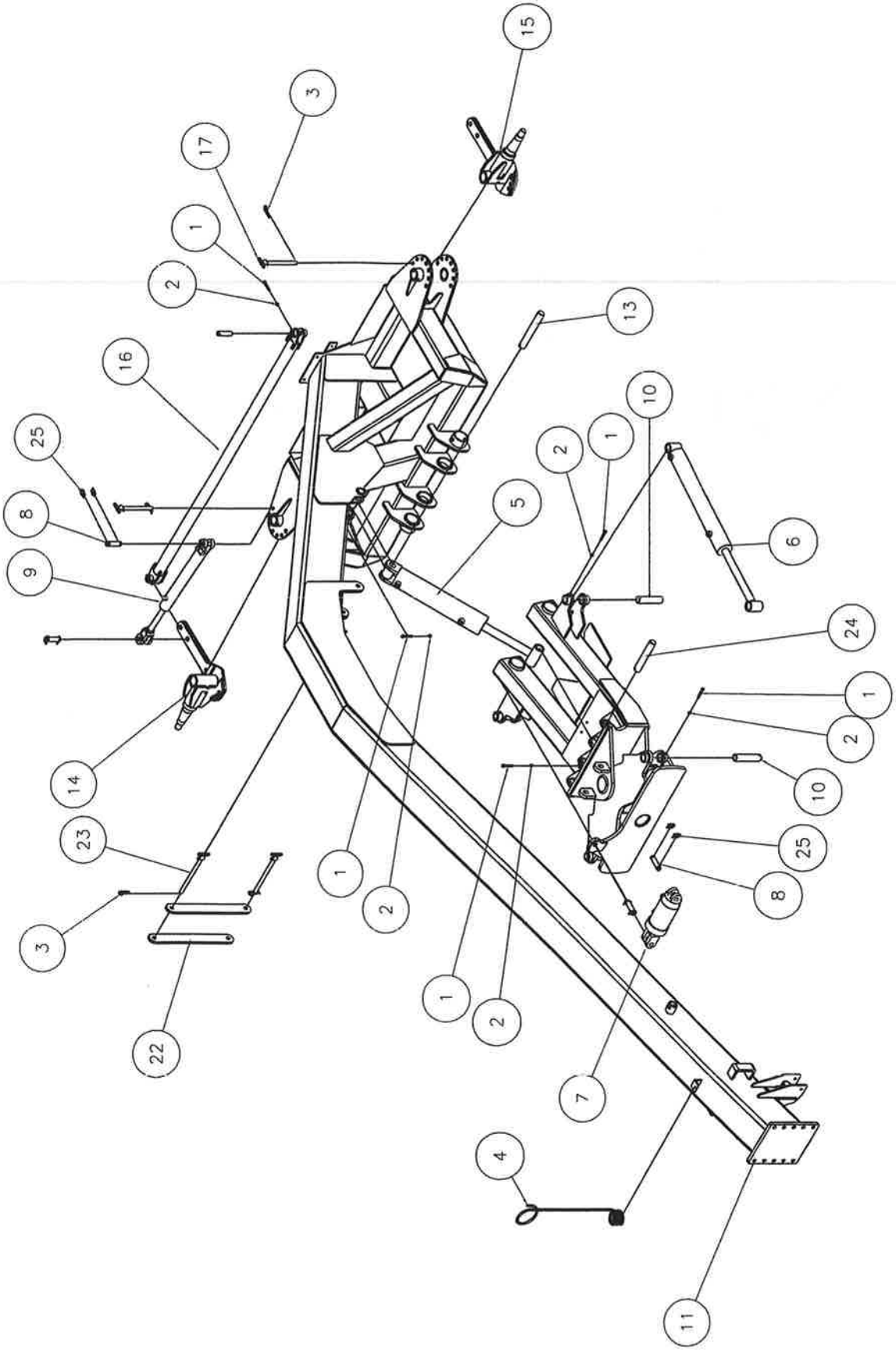

GZ SCRAPER–HYDRAULIC

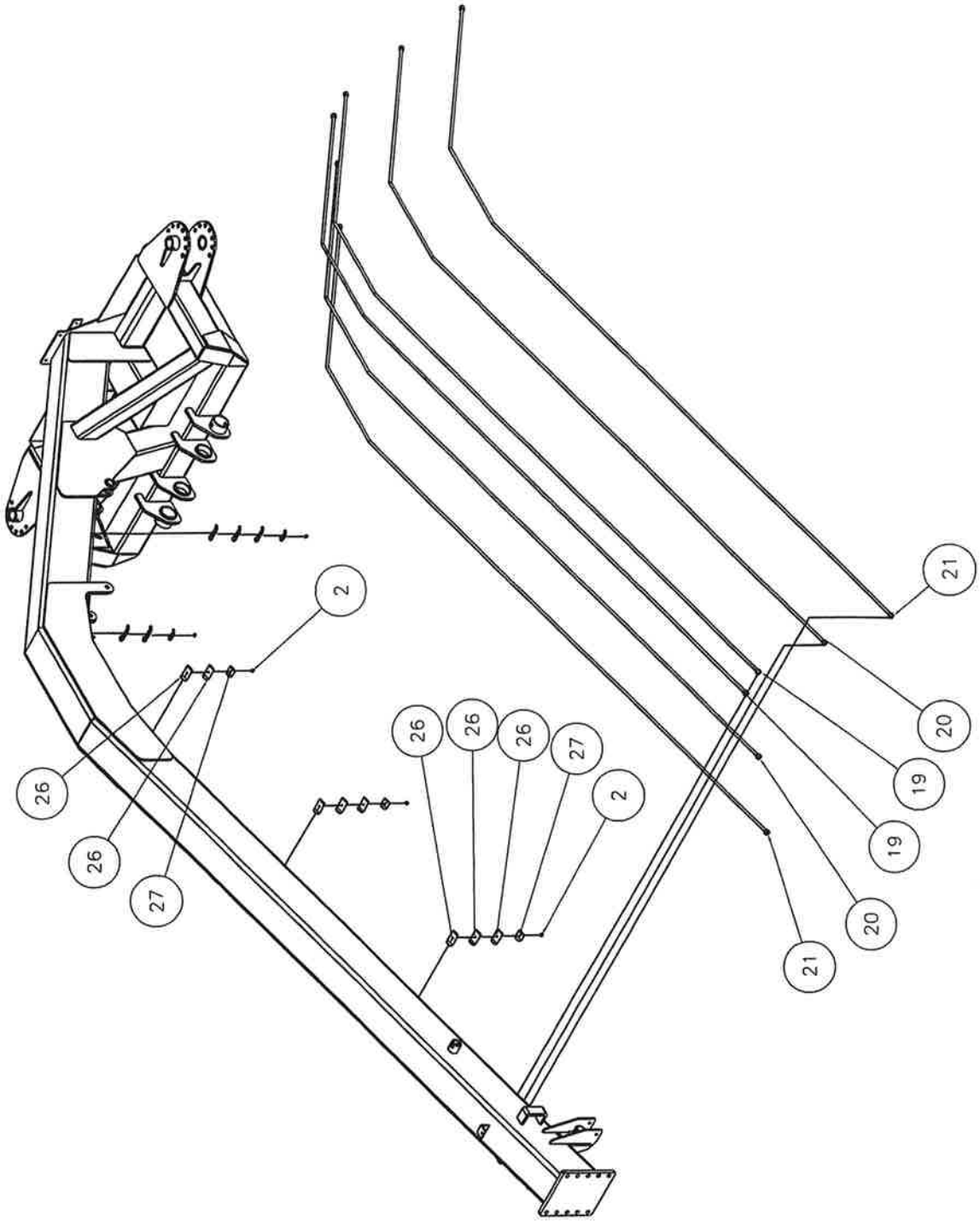

GZ SCRAPER–HYDRAULIC

PRINTED IN CANADA

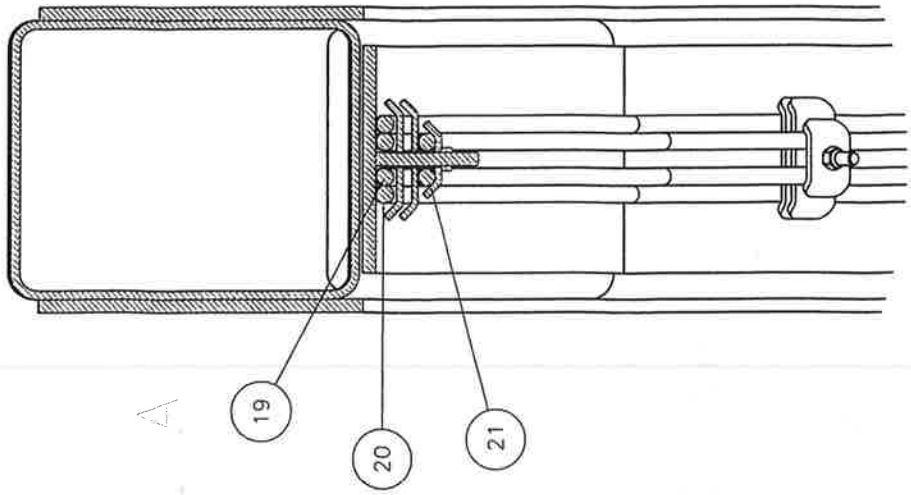

DETAIL A

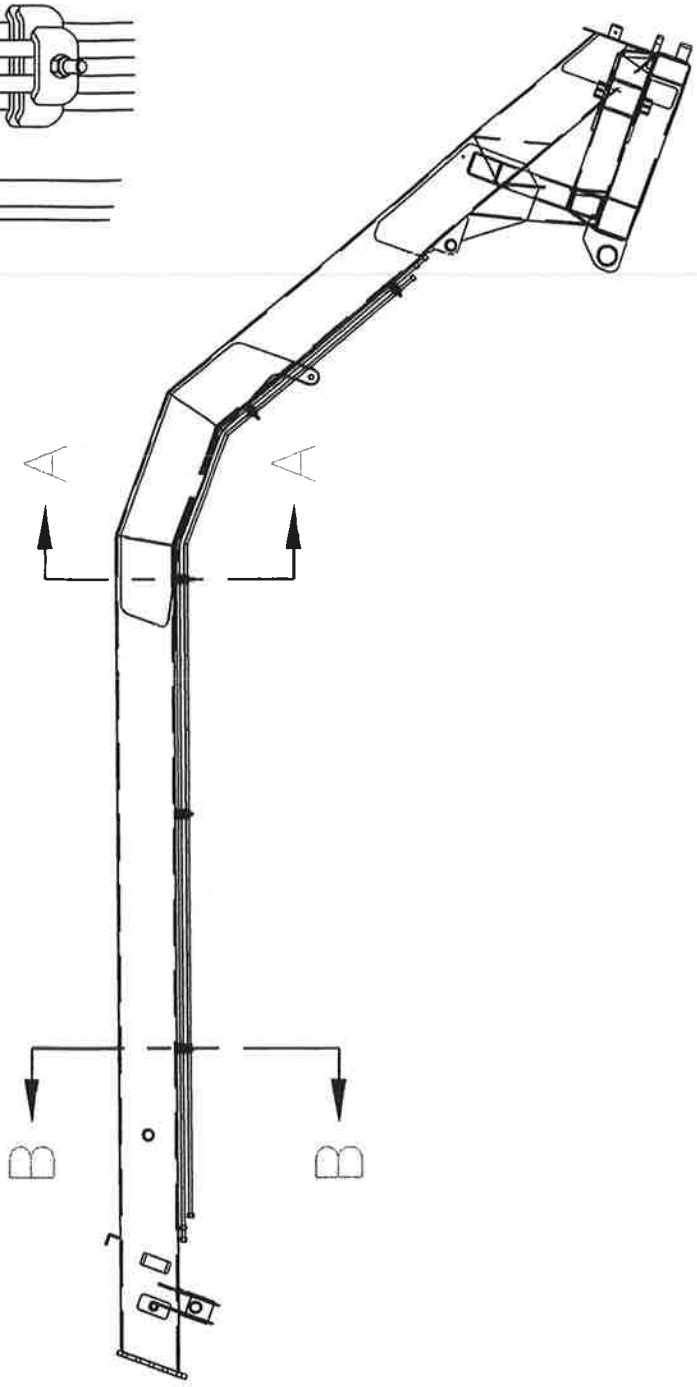

DETAIL B

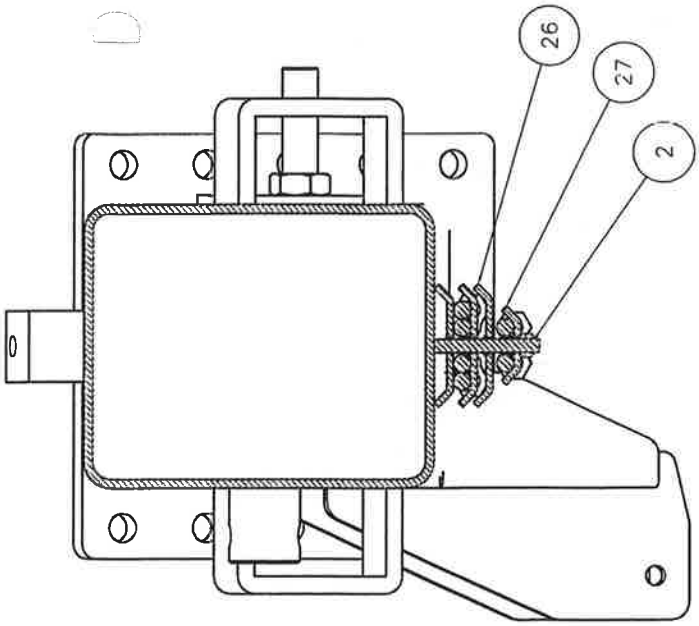

PRINTED IN CANADA

Parts List			
Item	Part No.	Description	Qty.
1	1102004	HEX HD BOLT–3/8UNC X 2 1/2	8
2	1102526	HEX LOCK NUT –3/8–16UNC	13
3	1102774	HITCHPIN – .188 X 2 – #8	4
4	1105556	HOLDER – HOSE	1
5	1122540B	CYLINDER – 4 X 16	1
6	1122588B	CYLINDER – 3 X 23	1
7	1127084B	CYLINDER – 4 X 3 1/4	1
8	1225654	PIN – GROOVE – 1 X 2 7/8 UL	4
9	1260177B	CYLINDER – 2 X 14 RAMLOK	1
10	1330570	PIN–CYLINDER–1 1/2 DIA X 6 1/2	4
11	1381010	HITCH – MAIN FRAME – GZ SCRAPER	1
12	1381020	SUBFRAME – BLADE SCRAPER – GZ	1
13	1381076	PIN – 1 1/2 DIA X 10 3/8	1
14	1381080	AXLE – RIGHT – H817 HUB	1
15	1381085	AXLE – LEFT – H817 HUB	1
16	1381090	ARM–AXLE STEER–GZ	1
17	1381094	PIN – RETAINER – AXLE PIVOT	2
18	1381109	PIN – 1 DIA X 3 3/4	2
19	1381131	OIL LINE – 1/2 X 175	2
20	1381132	OIL LINE – 1/2 X 180	2
21	1381133	OIL LINE – 1/2 X 184	2
22	1381180	LINK – SAFETY LATCH	2
23	1381181	PIN – RETAINER – SAFETY LATCH	2
24	1497174	PIN – 1 1/2 DIA X 8 3/4	1
25	1500115	RETAINER – GROOVE PIN	8
26	1707125	CLAMP – OIL LINE – 4 LINE	13
27	1707130	CLAMP – OIL LINE – 2 LINE	5

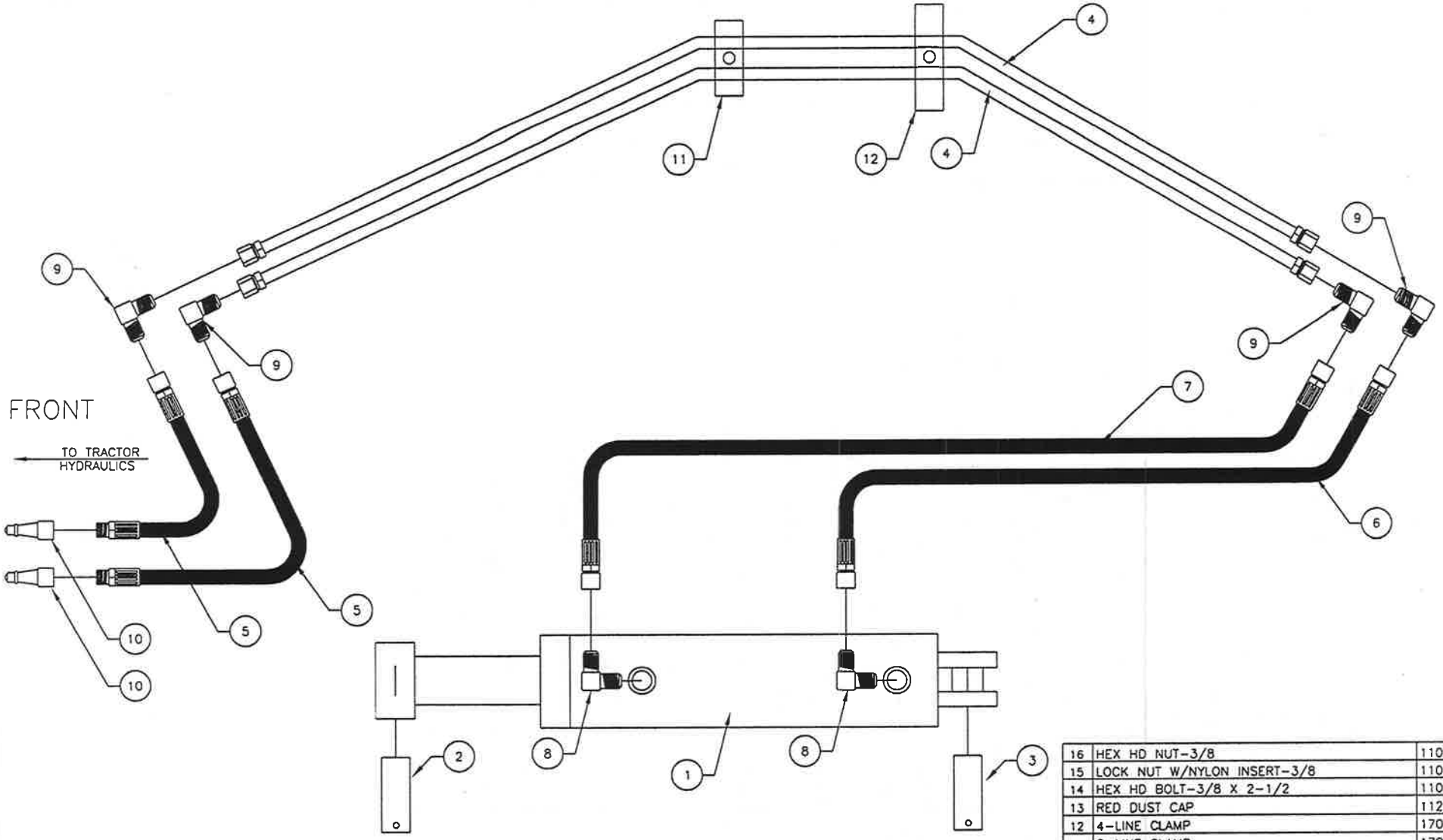

NO.	DESCRIPTION	PART #	QTY
16	HEX HD NUT-3/8	1102525	5
15	LOCK NUT W/NYLON INSERT-3/8	1102536	7
14	HEX HD BOLT-3/8 X 2-1/2	1102004	2
13	RED DUST CAP	1122775	2
12	4-LINE CLAMP	1707125	8
11	2-LINE CLAMP	1707130	10
10	COUPLER -1/2 NPT MALE PIONEER	1127011	2
9	ELBOW 90° 3/4-16 JICM x 3/4-16 JICM	1123587	4
8	ELBOW 90° 3/4-16 JICM X 3/4-16 ORBM	1123210	2
7	HOSE-1/2 X 28, 3/4-16 JICFSW (2)	1123446	1
6	HOSE-1/2 X 18, 3/4-16 JICFSW (2)	1123620	1
5	HOSE-1/2 X 120, 1/2NPTM X 3/4-16 JICFSW	1125855	2
4	HYDRAULIC TUBE - 1/2 X 184	1381133	2
3	PIN - 1 1/2 X 10 3/8	1381076	1
2	PIN - 1 1/2 X 8 3/4	1497174	1
1	HYDRAULIC CYLINDER-4 BORE X 16 STROKE	1122540	1

LEON

PRINTED IN CANADA

MOUNTING INSTRUCTIONS

KIT No. : 1381103	LIFT CYLINDER KIT		
DOZER : GZ-SCRAPER	JULY 02, 2010	1381103	PAGE 13

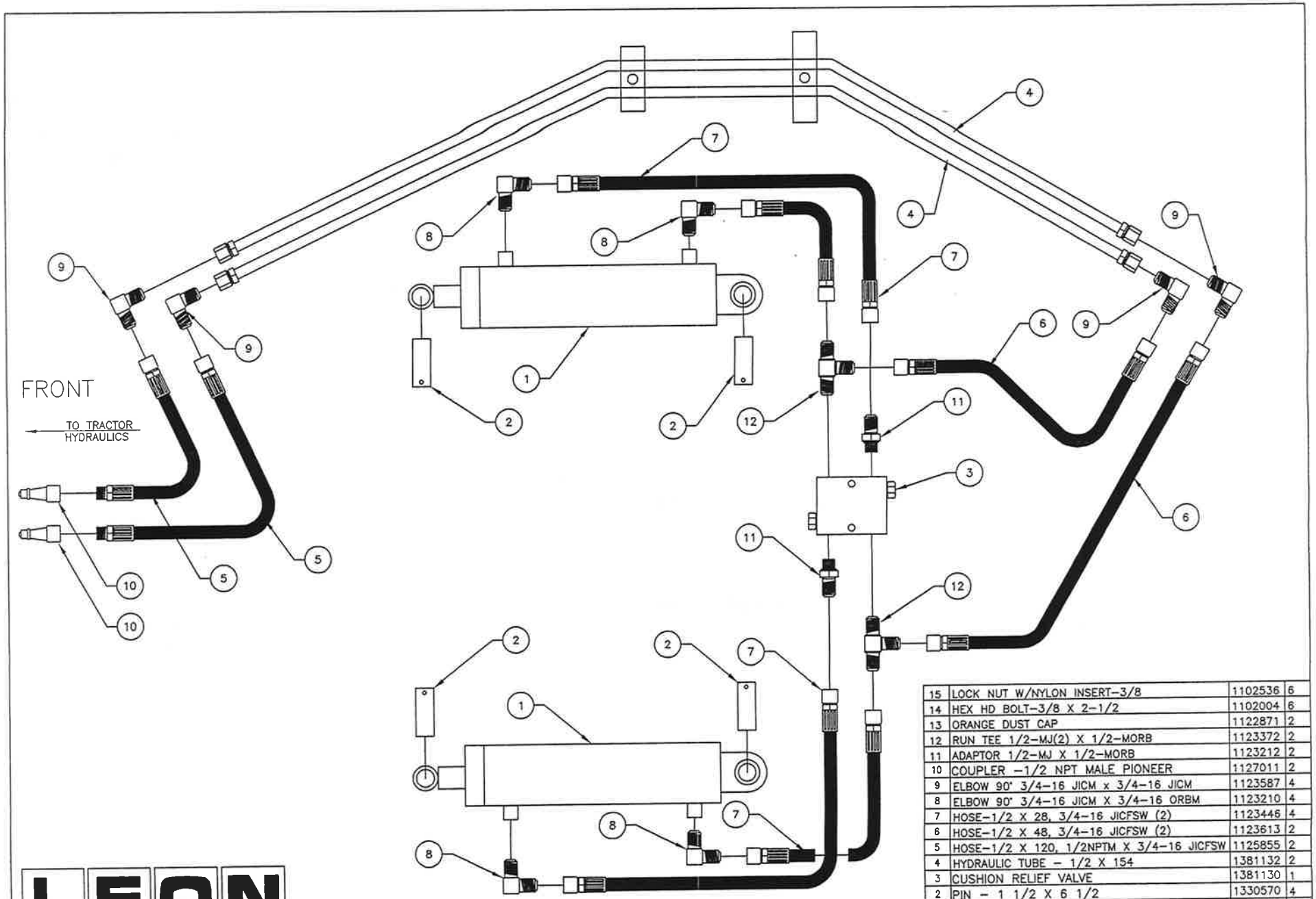

NO.	DESCRIPTION	PART #	QTY
15	LOCK NUT W/NYLON INSERT-3/8	1102536	6
14	HEX HD BOLT-3/8 X 2-1/2	1102004	6
13	ORANGE DUST CAP	1122871	2
12	RUN TEE 1/2-MJ(2) X 1/2-MORB	1123372	2
11	ADAPTOR 1/2-MJ X 1/2-MORB	1123212	2
10	COUPLER -1/2 NPT MALE PIONEER	1127011	2
9	ELBOW 90° 3/4-16 JICM x 3/4-16 JICM	1123587	4
8	ELBOW 90° 3/4-16 JICM X 3/4-16 ORBM	1123210	4
7	HOSE-1/2 X 28, 3/4-16 JICFSW (2)	1123446	4
6	HOSE-1/2 X 48, 3/4-16 JICFSW (2)	1123613	2
5	HOSE-1/2 X 120, 1/2NPTM X 3/4-16 JICFSW	1125855	2
4	HYDRAULIC TUBE - 1/2 X 154	1381132	2
3	CUSHION RELIEF VALVE	1381130	1
2	PIN - 1 1/2 X 6 1/2	1330570	4
1	HYDRAULIC CYLINDER-3 BORE X 23 STROKE	1122588	2

LEON

PRINTED IN CANADA

MOUNTING INSTRUCTIONS

KIT No. : 1381104	ANGLE CYLINDER KIT		
DOZER : GZ-SCRAPER	JULY 02, 2010	1381104	PAGE 14

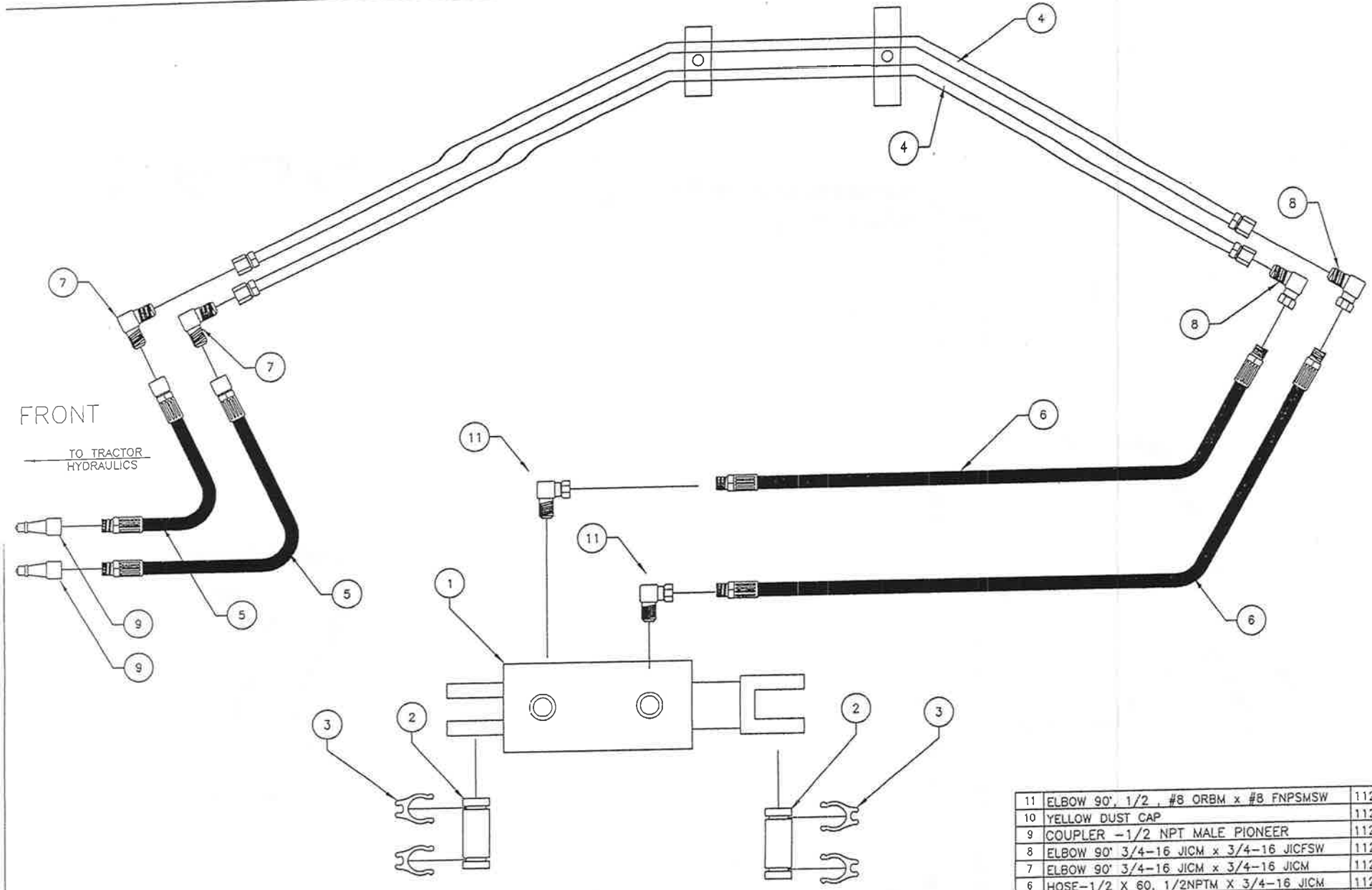

NO.	DESCRIPTION	PART #	QTY
11	ELBOW 90°, 1/2 , #8 ORBM x #8 FNPSMSW	1128193	2
10	YELLOW DUST CAP	1122779	2
9	COUPLER -1/2 NPT MALE PIONEER	1127011	2
8	ELBOW 90° 3/4-16 JICM x 3/4-16 JICFSW	1124405	2
7	ELBOW 90° 3/4-16 JICM x 3/4-16 JICM	1123587	2
6	HOSE-1/2 X 60, 1/2NPTM X 3/4-16 JICM	1123467	2
5	HOSE-1/2 X 120, 1/2NPTM X 3/4-16 JICFSW	1125855	2
4	HYDRAULIC TUBE - 1/2 X 175	1381131	2
3	RETAINER CLIP - GROOVE PIN	1500115	4
2	PIN - GROOVE - 1 DIA	1225654	2
1	HYDRAULIC CYLINDER-4 BORE X 3.25 STROKE	1127584	1

LEON

PRINTED IN CANADA

MOUNTING INSTRUCTIONS

KIT No. : 1381105	TILT CYLINDER KIT		
DOZER : GZ-SCRAPER	JUNE 18, 2014	1381105	PAGE 15

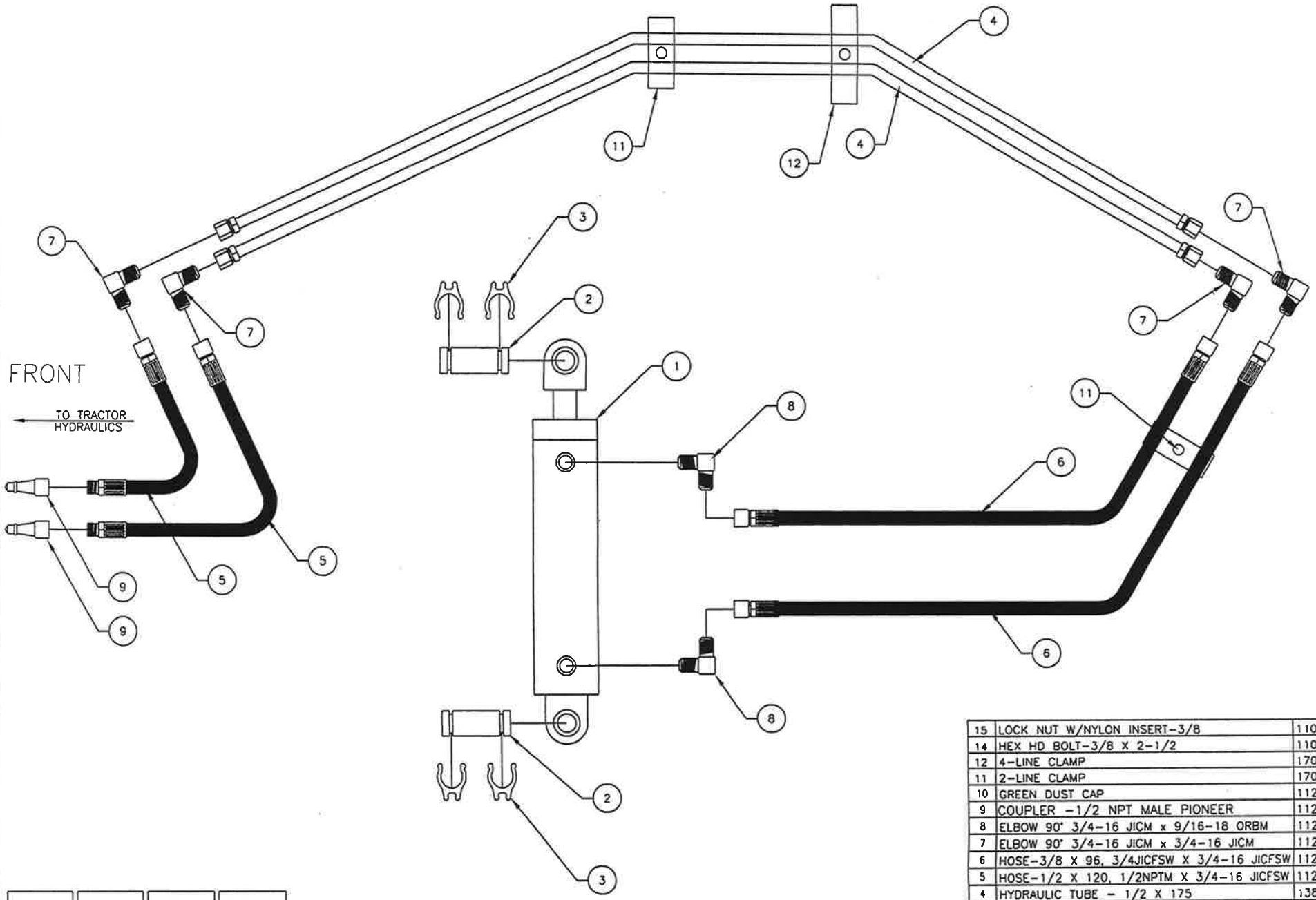

NO.	DESCRIPTION	PART #	QTY
15	LOCK NUT W/NYLON INSERT-3/8	1102536	2
14	HEX HD BOLT-3/8 X 2-1/2	1102004	2
12	4-LINE CLAMP	1707125	10
11	2-LINE CLAMP	1707130	4
10	GREEN DUST CAP	1122777	2
9	COUPLER -1/2 NPT MALE PIONEER	1127011	2
8	ELBOW 90° 3/4-16 JICM x 9/16-18 ORBM	1123215	2
7	ELBOW 90° 3/4-16 JICM x 3/4-16 JICM	1123587	2
6	HOSE-3/8 X 96, 3/4JICFSW X 3/4-16 JICFSW	1125853	4
5	HOSE-1/2 X 120, 1/2NPTM X 3/4-16 JICFSW	1125855	2
4	HYDRAULIC TUBE - 1/2 X 175	1381131	2
3	RETAINER CLIP - GROOVE PIN	1500115	4
2	PIN - GROOVE - 1 DIA	1225654	2
1	HYDRAULIC CYLINDER-2 BORE X 14 STROKE	1260177	1

LEON

PRINTED IN CANADA

MOUNTING INSTRUCTIONS

KIT No. : 1381101	STEERING CYLINDER KIT		
DOZER : GZ-SCRAPER	APRIL 12, 2012	1381101	PAGE 16

GZ-400 SCRAPER
AXLE / HUB - H817

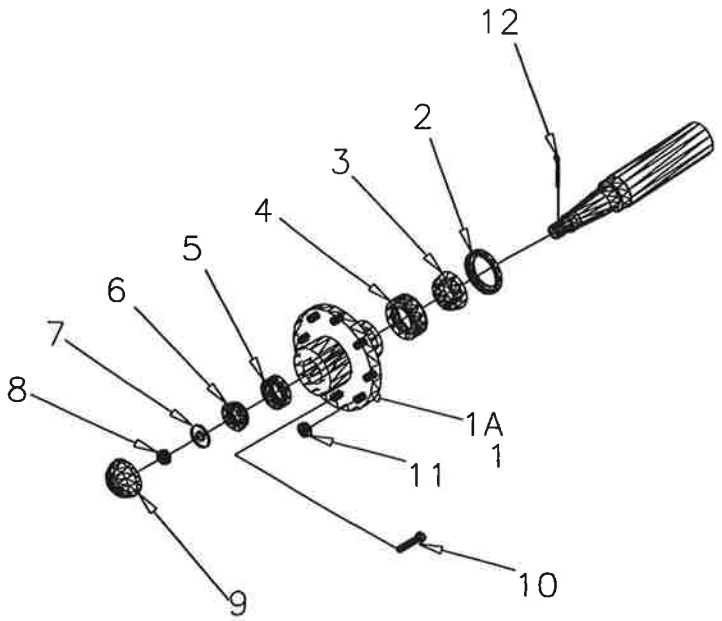

ITEM	PART NO.	QTY.	DESCRIPTION
1	1135513	1	HUB – H-817 – 8-BOLT
2	1135508	1	SEAL – GREASE – 3"
3	1135506	1	BEARING – INNER CONE
4	1135502	1	BEARING – INNER CUP
5	1135205	1	BEARING – OUTER CUP
6	1135206	1	BEARING – OUTER CONE
7	1135397	1	WASHER – SPINDLE
8	1135398	1	NUT-HEX CASTELLATED-1 1/4-12UNF
9	1135512	1	DUST CAP
10	1102664	1	WHEEL STUD – 5/8 UNF X 2 1/8
11	1135505	1	WHEEL NUT-TAPERED-5/8 UNF
12	1102753	1	COTTER PIN-1/4 X 2 1/2
1A	1135420	1	HUB – COMPLETE ASSEMBLY

PRINTED IN CANADA

GZ-400 SCRAPER
AXLE / HUB - HDA812

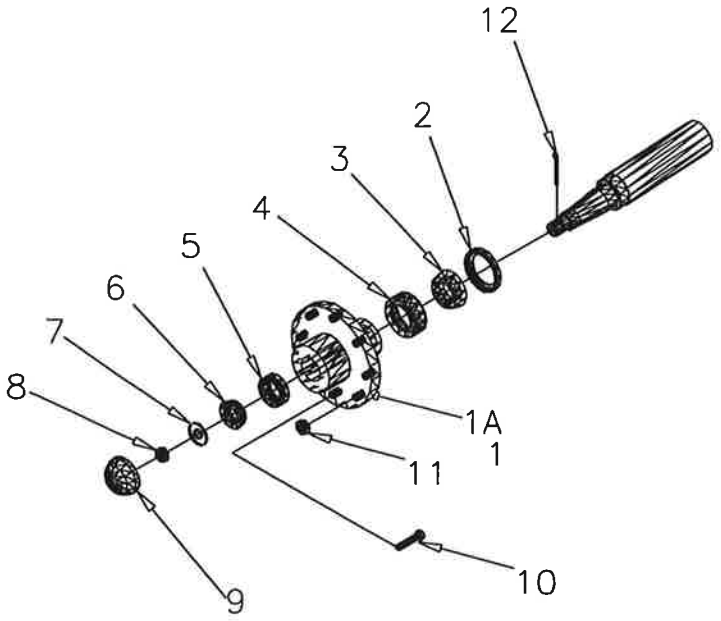

ITEM	PART NO.	QTY.	DESCRIPTION
1	1135533	1	HUB – HDA–812 – 8–BOLT
2	1135536	1	SEAL – GREASE – 2 3/4" (SE17)
3	1135542	1	BEARING – INNER CONE
4	1135541	1	BEARING – INNER CUP
5	1135543	1	BEARING – OUTER CUP
6	1135544	1	BEARING – OUTER CONE
7	1135397	1	WASHER – SPINDLE
8	1135398	1	NUT–HEX CASTELLATED–1 1/4–12UNF
9	1135534	1	DUST CAP
10	1102664	1	WHEEL STUD – 5/8 UNF X 2 1/8
11	1135505	1	WHEEL NUT–TAPERED–5/8 UNF
12	1102753	1	COTTER PIN–1/4 X 2 1/2
1A	1135535	1	HUB – COMPLETE ASSEMBLY

PRINTED IN CANADA

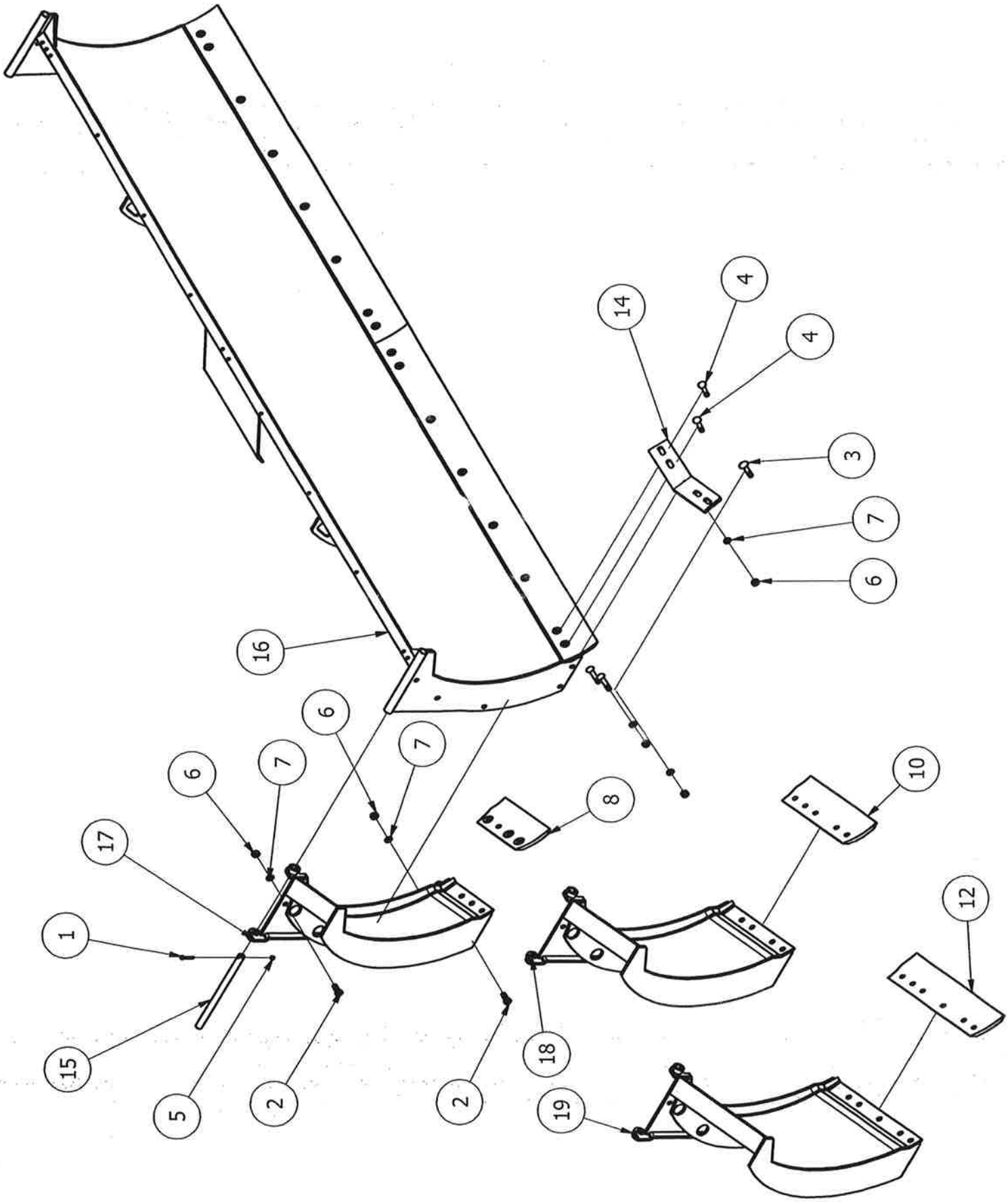

GZ ANGLED EXTENSIONS
PAGE NO. 19

PARTS LIST			
ITEM	QTY	PART NUMBER	DESCRIPTION
1	1	1101963	5/16" X 2 1/4" UNC GR. 5 PLATED HEX BOLT
2	5	1102100	5/8" X 1 1/2" UNC GR. 5 PLATED HEX BOLT
3	1	1102328	5/8" X 2 1/2" UNC PLOW BOLT GR. 5
4	4	1102389	5/8" X 3" UNC CARRIAGE BOLT GR. 5
5	1	1102521	5/16 UNC HEX LOCK NUT GR.5 PLATED
6	10	1102540	5/8" UNC HEX NUT GR.5 PLATED
7	10	1102594	5/8" SPLIT SPRING LOCK WASHER, PLATED
8	1	1162850	CUTTING EDGE - 1 FT - RT
9	1	1162851	CUTTING EDGE - 1FT - LT
10	1	1162852	CUTTING EDGE - 1.5 FT - RT
11	1	1162853	CUTTING EDGE - 1.5FT - LT
12	1	1162854	CUTTING EDGE - 2 FT - RT
13	1	1162855	CUTTING EDGE - 2FT - LT
14	1	1371248	MOUNT PLATE - BOTTOM
15	1	1381195	PIN-BOX END PIVOT
16	1	1381203	GZ BLADE
17	1	1381243	GZ ANGLED EXTENSION-1FT-RT
18	1	1381244	GZ ANGLED EXTENSION-1.5FT-RT
19	1	1381245	GZ ANGLED EXTENSION-2FT-RT
20	1	1381253	GZ ANGELD EXTENSION-1FT-LT
21	1	1381254	GZ ANGLED EXTENSION-1.5FT-LT
22	1	1381255	GZ ANGLED EXTENSION-2FT-LT

WARRANTY

REGISTRATION (OWNER'S COPY)

Leon's Mfg. Company Inc. warrants all products manufactured by Leon's Mfg. Company Inc. for a period of one year from the date of purchase for private use, or a period of 90 days for commercial use.

Leon's Mfg. Company Inc. warrants tires for a period of 60 days for private use or a period of 30 days for commercial use.

This warranty provides that the equipment shall be free of defective materials and workmanship, or we will replace or repair at our factory any part that our inspection shows to be defective.

If any product or portion thereof is modified, changed or tampered with in any way, this warranty shall be deemed null and void.

All hydraulic cylinders, valves, hoses, tires, spindles and other purchased products, except as specifically included in the warranty above, are not manufactured by Leon's and are, therefore, covered by the warranties of the manufacturer of these products.

All parts shipped to the factory shall be shipped prepaid and will be returned F.O.B. Factory. Leon's Mfg. Company Inc. does not assume responsibility for shipping, labour or travel expenses.

Although Leon's products are designed to minimize tractor strain, Leon's Mfg. Company Inc. will assume no responsibility for damage to tractors or other equipment.

Leon's Mfg. Company Inc. reserves the right to make improvements and reserve the right to change the design, materials and specifications without notice or obligation.

MODEL NO. _____ **DATE OF PURCHASE** _____

SERIAL NO. _____ **DEALER** _____

TOWN _____ **PROV. / STATE** _____

OWNER _____ **ADDRESS** _____

TOWN _____ **PROV. / STATE** _____

What make and model of tractor will this product be used with?-_____

Will this product be used: commercially? _____
Privately? _____

Why did you buy **Leon**?
Advertising _____
Previous Owner _____
Recommendation_____
Special Features _____

Comments:

NOTE: This warranty is effective only if the warranty registration is filled in and mailed by the original purchaser within ten days after the date of delivery.

WARRANTY

REGISTRATION (OWNER'S COPY)

Leon's Mfg. Company Inc. warrants all products manufactured by Leon's Mfg. Company Inc. for a period of one year from the date of purchase for private use, or a period of 90 days for commercial use.

Leon's Mfg. Company Inc. warrants tires for a period of 60 days for private use or a period of 30 days for commercial use.

This warranty provides that the equipment shall be free of defective materials and workmanship, or we will replace or repair at our factory any part that our inspection shows to be defective.

If any product or portion thereof is modified, changed or tampered with in any way, this warranty shall be deemed null and void.

All hydraulic cylinders, valves, hoses, tires, spindles and other purchased products, except as specifically included in the warranty above, are not manufactured by Leon's and are, therefore, covered by the warranties of the manufacturer of these products.

All parts shipped to the factory shall be shipped prepaid and will be returned F.O.B. Factory. Leon's Mfg. Company Inc. does not assume responsibility for shipping, labour or travel expenses.

Although Leon's products are designed to minimize tractor strain, Leon's Mfg. Company Inc. will assume no responsibility for damage to tractors or other equipment.

Leon's Mfg. Company Inc. reserves the right to make improvements and reserve the right to change the design, materials and specifications without notice or obligation.

MODEL NO. _____ **DATE OF PURCHASE** _____

SERIAL NO. _____ **DEALER** _____

TOWN _____ **PROV. / STATE** _____

OWNER _____ **ADDRESS** _____

TOWN _____ **PROV. / STATE** _____

What make and model of tractor will this product be used with?-_____

Will this product be used: commercially? _____
Privately? _____

Why did you buy **Leon**?
Advertising _____
Previous Owner _____
Recommendation_____
Special Features _____

Comments:

NOTE: This warranty is effective only if the warranty registration is filled in and mailed by the original purchaser within ten days after the date of delivery.